IDENTIFICATION OF NONLINEAR SYSTEMS USING THE TEACHING-LEARNING BASED OPTIMIZATION ALGORITHM

Leonardo Ramos Rodrigues
Instituto de Aeronáutica e Espaço - IAE
Praça Marechal Eduardo Gomes, 50, São José dos Campos, SP, Brasil, 12228-904
leonardolrr@iae.cta.br

Takashi Yoneyama
Instituto Tecnológico de Aeronáutica - ITA
Praça Marechal Eduardo Gomes, 50, São José dos Campos, SP, Brasil, 12228-900
takashi@ita.br

Lucas Sousa de Oliveira
Instituto Tecnológico de Aeronáutica - ITA
Praça Marechal Eduardo Gomes, 50, São José dos Campos, SP, Brasil, 12228-900
lsoliveira459@gmail.com

ABSTRACT

This paper uses the recently proposed Teaching-Learning Based Optimization (TLBO) algorithm to solve the nonlinear system parameter identification problem. It is assumed that the structure of the system is known. Numerical experiments are performed to evaluate the performance of the TLBO algorithm applied to two nonlinear models already studied in the literature, namely the Output Error Polynomial (OEP) and the Output Error Rational (OER) models. Results obtained in a previous work using the Cuckoo Search via Lévy Fights algorithm are considered to establish a comparative performance baseline. The results obtained in the numerical experiments show that the TLBO algorithm provided good accuracy in both models, outperforming the baseline for the OER model. The TLBO algorithm is easy to implement, and the reduced number of parameters simplifies the parameter tuning process. Based on the results, the TLBO may be considered as an attractive alternative for the nonlinear system parameter identification problem.

KEYWORDS. Parameters Identification. Nonlinear Systems. Metaheuristics. TLBO.

Paper topic: MH - Metaheuristics

1. Introduction

The parameter identification problem for linear systems is a well-established area of study [Ljung, 2010]. A set of tools is available for linear system identification such as modal testing [Ewins, 2000] and modal analysis [Maia and Silva, 1997]. For linear systems, the transfer function which relates the inputs with the outputs of the system remains constant. Thus, the mathematical model obtained in the system identification process can be used for any input level [Gondhalekar, 2009].

For nonlinear systems, however, in most cases it is not possible to obtain a mathematical model of the system by performing the system identification process at a single input level. The model obtained at a given operating point can, at best, provide information about the equivalent linear system at that operating point [Gondhalekar, 2009]. The nonlinear system identification problem can be divided into three different stages [Gondhalekar, 2009]:

1. Nonlinearity detection;
2. Nonlinearity characterization; and
3. Nonlinear parameter estimation.

In the first stage, the presence of nonlinearities in the system is detected. Many methods are available in the literature for this stage. A common method used to detect the presence of nonlinearities in the system is the verification of fundamental principles of linear systems such as linear superposition and reciprocity. A summary of nonlinearity detection techniques is presented in Vanhoenacker et al. [2002].

In the second stage, the main goal is to identify the location, the type, and the functional form of all nonlinearities in the system [Kerschen et al., 2006]. Nonlinearity characterization is an important stage in nonlinear system identification problems. Some of the methods used in the first stage may be extended in order to be used in the second stage. For simple models, the location of nonlinearity can be identified by looking at the model structure. For complex models, however, mathematical techniques need to be applied in order to identify the location of nonlinearities. Some works have been published with methods for nonlinearities characterization such as Adams and Allemang [1999], Tanrikulu and Ozguven [1991] . There is still a lack of validated techniques for nonlinearity characterization of complex systems, and subjective judgments are often made about the location and type of nonlinearities for complex systems.

In the third stage, the goal is to estimate the parameter values of the nonlinear model. Nonlinear parameter extraction techniques based on experimental measurements are commonly used in this stage. The techniques used in this stage can be divided into spatial methods and modal methods. Most of spatial methods are in time-domain, such as the methods proposed by Masri and Caughy [1979] and by Billings and Leontaritis [1985]. Some modal methods can be found in Gilbert [2003] and Kerschen et al. [2009].

This paper is focused on the third stage (nonlinear parameter estimation). Some works have been proposed using metaheuristic methods to estimate parameters of nonlinear systems [Souza et al., 2014]. Good results have been achieved by methods using Artificial Neural Networks [Samad and Mathur, 1992], Genetic Algorithms [Yao and Sethares, 1994] and Particle Swarm Optimization [Schwaab et al., 2008], among other metaheuristics. In this paper, the recently proposed TLBO algorithm is used in order to estimate the parameters of nonlinear systems. Numerical experiments with nonlinear models already discussed in the literature are carried out in order to evaluate the performance of the TLBO algorithm. Results obtained in a previous work using the Cuckoo Search via Lévy Fights algorithm [Souza et al., 2014] are used in order to establish a comparative performance baseline.

The remaining sections of this paper are organized as follows. Section 2 describes the parameter identification problem under consideration. Section 3 presents the basic principles of the TLBO algorithm. Section 4 presents the methodology used in this paper to tune the parameters of the TLBO algorithm. Section 5 shows the results obtained in the numerical experiments in which the TLBO algorithm was applied to two nonlinear problems already studied in the literature. Concluding remarks are presented in section 6.

2. Problem Definition

The parameter identification problem addressed in this paper can be stated as follows. Consider a discrete nonlinear system A with input $u(k)$ and output $y(k)$. A mathematical model of system A is available. The output $y(k)$ is a function of past inputs, past outputs and measurements noise. The system A can be represented by a mathematical model based on the nonlinear difference equation model presented in Equation (1).

$$y(k) = g(y(k-1), \ldots, y(k-n_y), u(k-1), \ldots, u(k-n_u)) + e(k) \tag{1}$$

where $g(\cdot)$ is a nonlinear function, n_y and n_u are the maximum lags in the output and input, respectively, and $e(k)$ is the system noise, which is assumed to be a white noise sequence.

Consider a parameter vector θ containing the set of parameters of the mathematical model of system A which are unknown. Each element of θ is a real number. Therefore, the problem consists in estimating the values of each element of parameter vector θ.

A dataset containing an input signal $u(k)$ and the corresponding output signal $y(k)$ is available. Thus, it is possible to define an objective function J which quantifies, for a given θ, the difference between the output obtained with θ and the real output, when $u(k)$ is used as input. When the objective function J is minimized, an estimation for θ can be obtained.

3. Teaching-Learning Based Optimization Algorithm

The TLBO algorithm has been recently proposed in the literature as a novel population oriented metaheuristic based on the teaching-learning process observed in a classroom [Rao et al., 2011]. This algorithm simulates the influence of a teacher on the output of a group of students in a class. The TLBO algorithm is divided into two main parts: the Teacher Phase and the Student Phase, which is also known as the Learner Phase [Rao and Patel, 2013]. During the Teacher Phase, students learn from the teacher, while in the Learner Phase students learn through the interaction among themselves.

There is a solution X associated with each student, which corresponds to a possible solution for the optimization problem under consideration. Also, there is a result $f(X)$ associated with each solution (or student), which can be obtained by evaluating the solution X using the objective function J. In the parameter estimation problem considered in this paper, a solution X corresponds to a candidate parameter vector θ.

The student with the best solution in the population is considered as the Teacher. The steps for implementing the TLBO algorithm are presented in Figure 1 [Rao et al., 2011]. The Teacher Phase and the Student Phase are described in the next sections.

3.1. Teacher Phase

In this phase, the algorithm simulates the learning of the students from the teacher (best solution). During this phase, the teacher makes an effort to increase the mean result of the class.

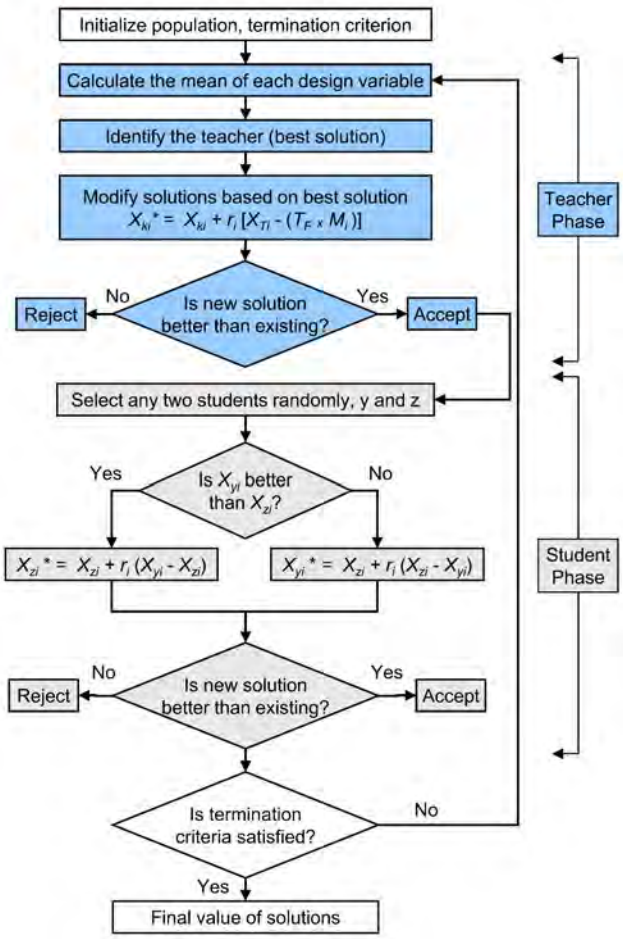

Figure 1: TLBO algorithm

Consider a group of n students. Let M_i be the mean solution of the students and T_i be the teacher at iteration i. The teacher T_i will make an effort to move M_i to its own level. Knowledge is gained based on the quality of the teacher and the quality of students in the class. The difference D_i between the solution of the teacher, X_{Ti}, and the mean solution of the students, M_i, can be expressed according to Equation (2):

$$D_i = r_i(X_{Ti} - T_F \cdot M_i) \tag{2}$$

where r_i is a random number in the range [0, 1] for iteration i and T_F is a teaching factor for iteration i, which is randomly set to either 1 or 2 according to Equation (3):

$$T_F = round(1 + rand(0,1)) \tag{3}$$

Based on the difference D_i, the existing solution of each student k in iteration i, X_{ki}, with $k \in \{1,2,\ldots,n\}$, is updated in the teacher phase according to Equation (4):

$$X_{ki}^\star = X_{ki} + D_i \tag{4}$$

where $X_{ki}^\star$ is the updated value of X_{ki}.

If $f(X_{ki}^\star)$ is better than $f(X_{ki})$, $X_{ki}^\star$ is accepted and replaces X_{ki}. Otherwise, $X_{ki}^\star$ is discarded and X_{ki} is not changed for the next iteration.

3.2. Student Phase

In this phase, the algorithm simulates the learning of the students through interaction with one another. During this phase, students gain knowledge by discussing with other students who have more knowledge [Rao and Patel, 2013].

Consider a pair of students y and z. Let X_{yi} and X_{zi} be the solutions of students y and z at iteration i, respectively. If $f(X_{yi})$ is better than $f(X_{zi})$, the solution of student z is updated according to Equation (5). Then, if $f(X^{\star}_{zi})$ is better than $f(X_{zi})$, $X^{\star}_{zi}$ is accepted and replaces X_{zi}. Otherwise, $X^{\star}_{zi}$ is discarded and X_{zi} is not changed for the next iteration. Similarly, if $f(X_{zi})$ is better than $f(X_{yi})$, the solution of student y is updated according to Equation (6). Then, if $f(X^{\star}_{yi})$ is better than $f(X_{yi})$, $X^{\star}_{yi}$ is accepted and replaces X_{yi}. Otherwise, $X^{\star}_{yi}$ is discarded and X_{yi} is not changed for the next iteration.

$$X^{\star}_{zi} = X_{zi} + r_i(X_{yi} - X_{zi}) \tag{5}$$

$$X^{\star}_{yi} = X_{yi} + r_i(X_{zi} - X_{yi}) \tag{6}$$

At the end of each iteration, the stop criteria are checked. Different stop criteria may be adopted. Some of the most commonly adopted stop criteria are the maximum number of iterations, the maximum number of successive iterations without any improvement, the maximum simulation time and the maximum number of function evaluations.

In this paper, the maximum number of function evaluations is adopted as the stop criterion, as in other applications of TLBO in combinatorial problems [Baykasoğlu et al., 2014], [Crawford et al., 2015], [Patil, 2016].

4. Parameters Tuning for the TLBO

A metric commonly used for comparing the performance of different metaheuristics for solving continuous optimization problems is the number of function evaluations.

In this paper, the results obtained with TLBO will be compared with the results obtained by Souza et al. [2014]. In their work, the authors proposed a modified version of the cuckoo search optimization algorithm, which was originally proposed by Yang and Deb [2009]. The stop criterion adopted by [Yang and Deb, 2009] is based on the number of generations without a significant improvement in the objective function. They used a population size p of 15, a discovery rate r of 25% and the algorithm stopped when no significant improvement was observed in the last 1,000 generations.

Ong [2014] tested the convergence of the cuckoo search algorithm for various optimization problems. The average number of generations needed for the algorithm to converge was about 1,500. Thus, the average total number of generations, g, needed for the stop criterion adopted in Souza et al. [2014] to be reached is estimated to be approximately 2,500.

The total number of functions evaluations in the cuckoo search, n_{CS}, can be estimated using Equation (7).

$$n_{CS} = p + g \times [1 + (r \times p)] \tag{7}$$

Therefore, based on the parameter values, the estimation of the number of function evaluations in the cuckoo search algorithm is 11,890. In this paper, in order to provide a fair comparison, the stop criterion adopted for the TLBO algorithm is also the maximum number of function evaluations. It was decided to use 10,000 as the maximum number of function evaluations allowed.

In order to define the population size for the TLBO algorithm, PS, ten different possible values were considered: [10, 20, 30, ..., 100]. For each value of PS, a Monte Carlo method with 30 iterations was carried out. The best results for both the OEP and the OER models (that will be discussed in more details in section 5 were obtained for PS = 50. This value was then adopted to run the experiments that will be presented in section 5.

5. Numerical Experiments

This section presents a set of numerical experiments to investigate the performance of the TLBO algorithm applied to the parameter identification of nonlinear systems problem. Two different models are used in the experiments: the Output Error Polynomial (OEP) model and the Output Error Rational (OER) model. The OEP model is linear in parameters, while the OER model is not.

Both the OEP and the OER models were used by Souza et al. [2014]. As mentioned earlier, the results obtained with TLBO will be compared with the results obtained by Souza et al. [2014] using a modified version of the cuckoo search optimization algorithm.

5.1. Output Error Polynomial (OEP) Model

In this experiment, the Output Error Polynomial (OEP) model originally presented in Piroddi and Spinelli [2003] is considered. The OEP model is described by Equations (8) and (9). Figure 2 shows the Matlab Simulink ® implementation of the OEP model used to run the experiments.

$$w(k) = 0.75w(k-2) + 0.25u(k-1) - 0.2w(k-2)u(k-1) \quad (8)$$

$$y(k) = w(k) + e(k) \quad (9)$$

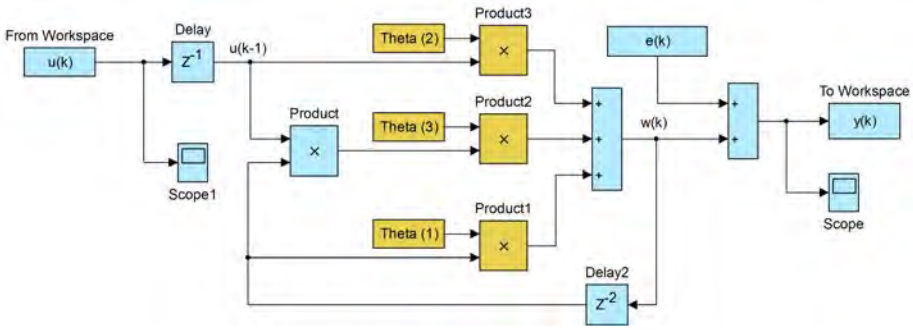

Figure 2: OEP model

Figure 3 shows the signal used as input for the OEP model, $u(k)$, as well as the corresponding output signal, $y(k)$. One characteristic of the OEP model is that it presents an unstable behavior, which brings an additional difficulty to the identification problem because it may generate multiple local minima in the objective function. In this example, the minimum and the maximum values of $y(k)$ are -3.67x10^{12} and 6.93x10^{3}, respectively.

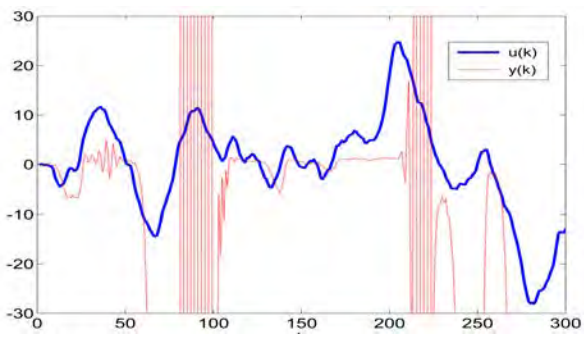

Figure 3: Unstable behavior of the OEP model

A series of 300 measurements was used in the experiments. The error $e(k)$ is a white Gaussian noise with mean zero and variance 0.25. A Monte Carlo method with 1,000 iterations was used. Table 1 and Table 2 show the results obtained with the Cuckoo Search and the TLBO algorithm, respectively.

Table 1: OEP model results with cuckoo search

Parameter	Reference	Minimum Value	Maximum Value	Mean Value	Standard Deviation
θ_1	0.75	0.7497	0.7500	0.7500	0.000
θ_2	0.25	0.0316	0.3408	0.2336	0.0402
θ_3	-0.20	-0.2001	-0.2000	-0.2000	0.0000

Table 2: OEP model results with TLBO

Parameter	Reference	Minimum Value	Maximum Value	Mean Value	Standard Deviation
θ_1	0.75	0.7490	0.7515	0.7499	0.0009
θ_2	0.25	0.0557	0.3342	0.2424	0.0508
θ_3	-0.20	-0.2016	-0.1994	-0.2004	0.0006

It can be noted from the results presented in Table 1 and Table 2 that, for the OEP model, the TLBO algorithm provided an excellent accuracy in the estimates of parameters θ_1 and θ_3. It can also be noted that estimating the value of parameter θ_2 is the most challenging task for the OEP model. This fact was also observed in the results obtained by Souza et al. [2014]. For parameter θ_2, the TLBO algorithm provided a better estimate. Although the standard deviation obtained with the TLBO algorithm was higher than the one obtained with the cuckoo search algorithm, the TLBO provided a more accurate estimate of the mean value. Additionally, the interval defined by the minimum and the maximum estimated values was narrower for the TLBO algorithm.

5.2. Output Error Rational (OER) Model

In this experiment, the Output Error Rational (OER) model originally presented in Zhu [2005] is considered. The OER model is described by Equations (10) and (11). Figure 4 shows the Matlab Simulink ® implementation of the OER model used to run the experiments.

$$w(k) = \frac{0.3w(k-1)w(k-2) + 0.7u(k-1)}{1 + w(k-1)^2 + u(k-1)^2} \tag{10}$$

$$y(k) = w(k) + e(k) \tag{11}$$

For the OER model, a random number generation block was used to generate an uniformly distributed input signal with mean zero and variance 0.33. A series of 1,000 measurements were used in the experiments. The error $e(k)$ is a white Gaussian noise with mean zero and variance 0.01. A Monte Carlo method with 1,000 iterations was used. Table 3 and Table 4 show the results obtained with the Cuckoo Search and the TLBO algorithm, respectively.

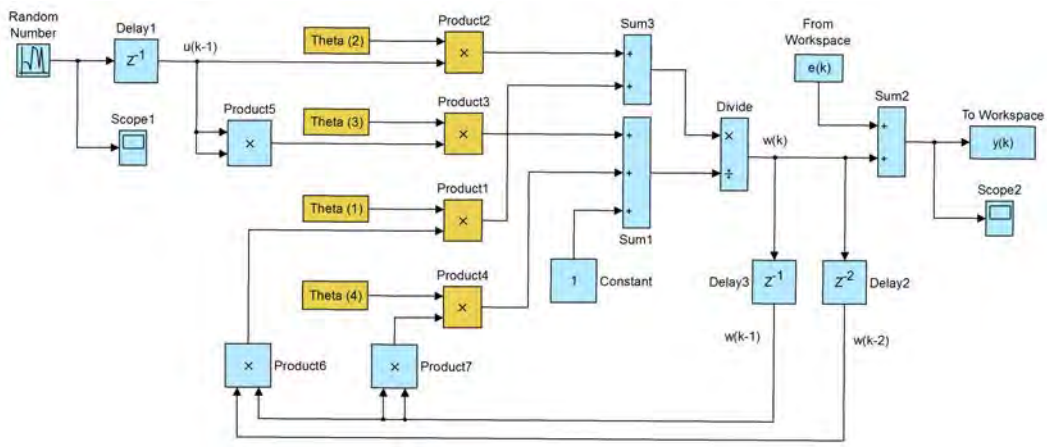

Figure 4: OER simulink model

Table 3: OER model results with cuckoo search

Parameter	Reference	Minimum Value	Maximum Value	Mean Value	Standard Deviation
θ_1	0.3	0.0874	0.5552	0.3008	0.0745
θ_2	0.7	0.6182	0.7882	0.6981	0.0266
θ_3	1.0	-0.4115	2.5834	0.9693	0.5121
θ_4	1.0	0.7476	1.2415	0.9971	0.0837

Table 4: OER model results with TLBO

Parameter	Reference	Minimum Value	Maximum Value	Mean Value	Standard Deviation
θ_1	0.3	0.2572	0.3228	0.2981	0.0184
θ_2	0.7	0.6526	0.7106	0.6962	0.0092
θ_3	1.0	0.6084	1.5208	0.9795	0.1587
θ_4	1.0	0.8721	1.1368	0.9923	0.0440

Based on the results presented in Table 3 and Table 4, it can said that, for the OER model, the TLBO algorithm outperformed the cuckoo search method. The estimated mean values obtained with the TLBO algorithm were very close to the real values. Also, when compared with the results obtained with the cuckoo search method, the standard deviation of all parameters were smaller, and the interval defined by the minimum and the maximum estimated values were narrower for all parameters. Also, it can be observed that the results are consistent with the results obtained in Souza et al. [2014] in terms of the relative difficulty to estimate the parameters of the OER model, with θ_3 being the most challenging parameter to be estimated.

6. Conclusions

In this paper, the performance of the recently proposed Teaching-Learning Based Optimization (TLBO) algorithm to solve the nonlinear system parameter identification problem was evaluated. It was assumed that the structure of the system is known.

Numerical experiments were carried out using two nonlinear models already studied in the literature, namely the Output Error Polynomial (OEP) and the Output Error Rational (OER) models. The OEP model has an unstable behavior, while the OER model is nonlinear in parameters. Those characteristics increase the complexity of the parameter identification process. The results obtained with the TLBO algorithm were compared with the results obtained by Souza et al. [2014] with the Cuckoo Search via Lévy Fights algorithm.

The TLBO algorithm provided an excellent accuracy in the estimates of parameters θ_1 and θ_3 for the OEP model. For parameters θ_2, which is the most challenging in the OEP model, the TLBO algorithm presented a better performance. For the OER model, the TLBO algorithm outperformed the Cuckoo Search via Lévy Fights algorithm method for all parameters, providing good estimates with smaller standard deviation and narrower intervals for all parameters.

The TLBO algorithm was easy to test and implement. Also, the reduced number of parameters simplified the parameter tuning process. Based on the results, it can be concluded that the TLBO may be considered as an attractive alternative to solve the nonlinear system parameter identification problem.

In this paper, the TLBO algorithm was used in its basic version. One possible suggestion for extending this paper is to evaluate the performance of the TLBO algorithm, considering the improvements that have been proposed in the literature. Numerical experiments to compare the results obtained with the TLBO with other metaheuristics could also be conducted.

References

Adams, D. E. and Allemang, R. J. (1999). Characterization of nonlinear vibrating systems using internal feedback and frequency response modulation. *Journal of Vibration and Acoustics*, 121: 495–500.

Baykasoğlu, A., Hamzadayi, A., and Köse, S. Y. (2014). Testing the performance of teaching learning based optimization (TLBO) algorithm on combinatorial problems: Flow shop and job shop scheduling cases. *Information Sciences*, 276:204–218.

Billings, S. A. and Leontaritis, I. J. (1985). Input-output parametric models for nonlinear systems part I - deterministic nonlinear systems. *International Journal of Control*, 41(2):303–328.

Crawford, B., Soto, R., Leiva, F. A., Johnson, F., and Paredes, F. (2015). Problema del conjunto de cobertura resuelto mediante el algoritmo binario de optimización basado en enseñanza-aprendizaje. In *Conferência Ibérica de Sistemas e Tecnologias de Informação*, p. 106–109, Águeda. IEEE.

Ewins, D. J. (2000). *Modal Testing: Theory, Practice, and Application*. Research Studies Press, 2nd edition.

Gilbert, C. (2003). Fitting measured frequency response using non-linear modes. *Mechanical Systems and Signal Processing*, 17(1):211–218.

Gondhalekar, A. C. (2009). *Strategies for Non-linear Systems Identification*. PhD thesis, University of London.

Kerschen, G., Peeters, M., Golinval, J. C., and Vakasis, A. F. (2009). Nonlinear normal modes, part I: A useful framework for the structural dynamicist. *Mechanical Systems and Signal Processing*, 23:170–194.

Kerschen, G., Worden, K., Vakasis, A. F., and Golinval, J. C. (2006). Past, present and future of nonlinear identification in structural dynamic. *Mechanical Systems and Signal Processing*, 20: 505–592.

Ljung, L. (2010). Approaches to identification of nonlinear systems. In *Proceedings of the 29th Chinese Control Conference*, p. 1–5, Beijing. IEEE.

Maia, N. M. M. and Silva, J. M. M. (1997). *Theoretical and Experimental Modal Analysis*. Taunton, Somerset, England, Research Studies Press Ltd.

Masri, S. F. and Caughy, A. (1979). A non parametric identification technique for nonlinear dynamic problems. *The Scientific World Journal*, 46.

Ong, P. (2014). Adaptive cuckoo search algorithm for unconstrained optimization. *The Scientific World Journal*, 2014.

Patil, A. B. (2016). Teaching learning based optimization: Application and variation. In *Proceedings of the International Conference on Computing, Communication and Energy Systems*, p. 1–5, Sangli.

Piroddi, L. and Spinelli, W. (2003). An identification algorithm for polynomial NARX models based on simulation error minimization. *International Journal of Control*, 76(17):1767–1781.

Rao, R. V. and Patel, V. (2013). An improved teaching-learning-based optimization algorithm for solving unconstrained optimization problems. *Scientia Iranica*, 20:710–720.

Rao, R. V., Vakharia, D. P., and Savsani, V. J. (2011). Teaching-learning-based optimization: a novel method for constrained mechanical design optimization problems. *Computer-Aided Design*, 43: 303–315.

Samad, T. and Mathur, A. (1992). Parameter estimation for process control with neural networks. *International Journal of Approximate Reasoning*, 3:149–164.

Schwaab, M., Biscaia, E. C., Monteiro Jr., J. L., and Pinto, J. C. (2008). Nonlinear parameter estimation through particle swarm optimization. *Chemical Engineering Science*, 63(3):1542–1552.

Souza, D. K., Leandro, G. V., Oliveira, G., and Ribeiro, E. P. (2014). Estimação de parâmetros de sistemas não lineares por busca de cuco via voos de Lévy. In *Anais do XX Congresso Brasileiro de Automática*, p. 769–776, Belo Horizonte.

Tanrikulu, O. and Ozguven, H. N. (1991). A new method for the identification of nonlinearities in vibrating structures. In *Proceedings of the 4th International Conference on Structural Dynamics*, p. 483–492, Southampton.

Vanhoenacker, K., Schoukens, J., Swevers, J., and Vaes, D. (2002). Summary and comparing overview of techniques for the detection of non-linear distortions. In *Proceedings of ISMA 2002*, volume 3, p. 1241–1255, Leuven.

Yang, X. and Deb, S. (2009). Cuckoo search via Lévy flights. In *Proceeding of the World Congress on Nature Biologically Inspired Computing*, p. 210–214.

Yao, L. and Sethares, W. (1994). Nonlinear parameter estimation via the genetic algorithm. *IEEE Transactions on Signal Processing*, 42(4):927–935.

Zhu, Q. (2005). An implicit least squares algorithm for nonlinear rational model parameter estimation. *Applied Mathematical Modelling*, 29(7):673–689.